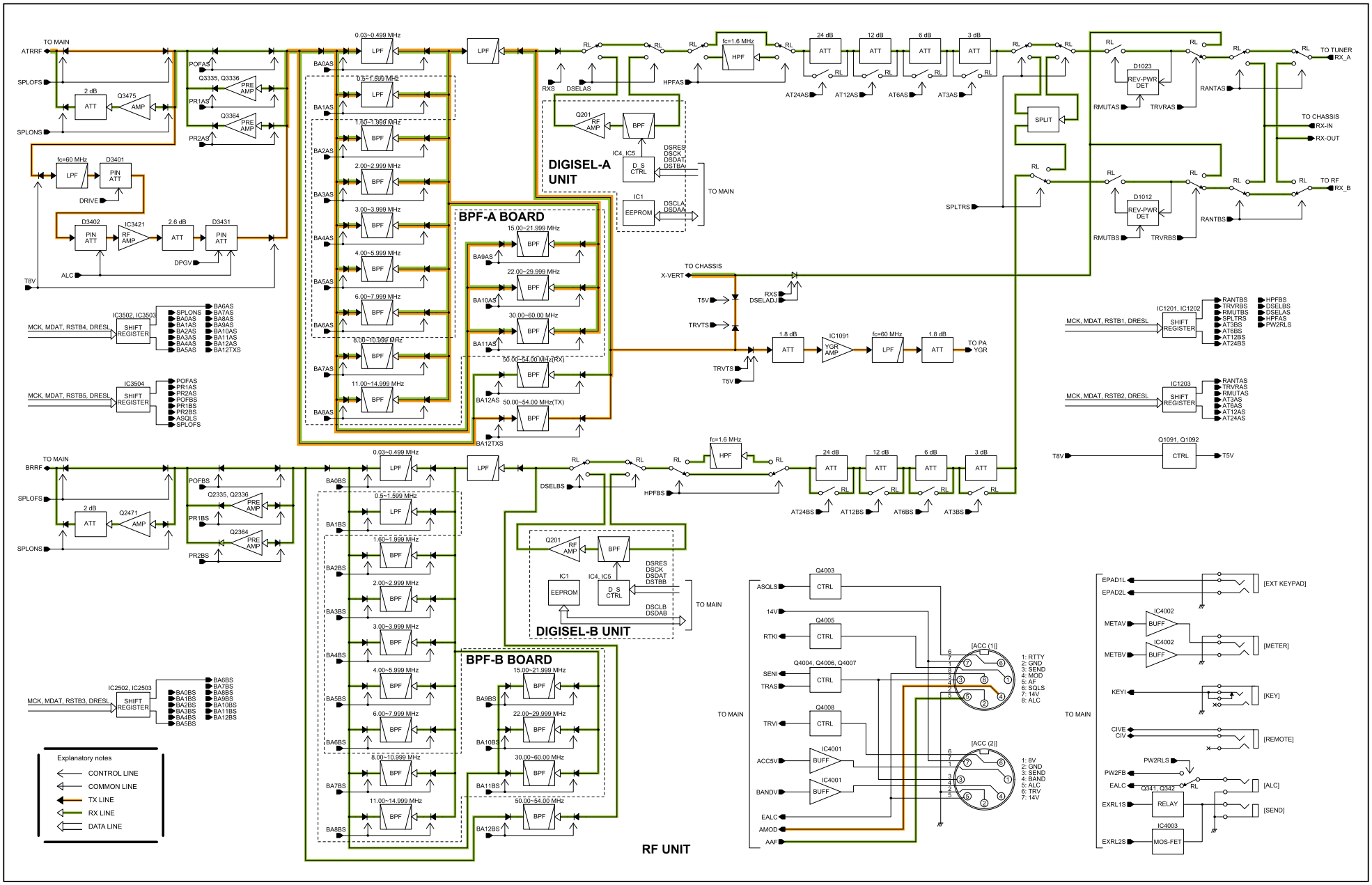
DIGISEL-A UNIT
BPF-A BOARD
DIGISEL-B UNIT
BPF-B BOARD
RF UNIT
TO MAIN
TO TUNER
TO CHASSIS
TO RF
TO PA
Explanatory notes
CONTROL LINE
COMMON LINE
TX LINE
RX LINE
DATA LINE

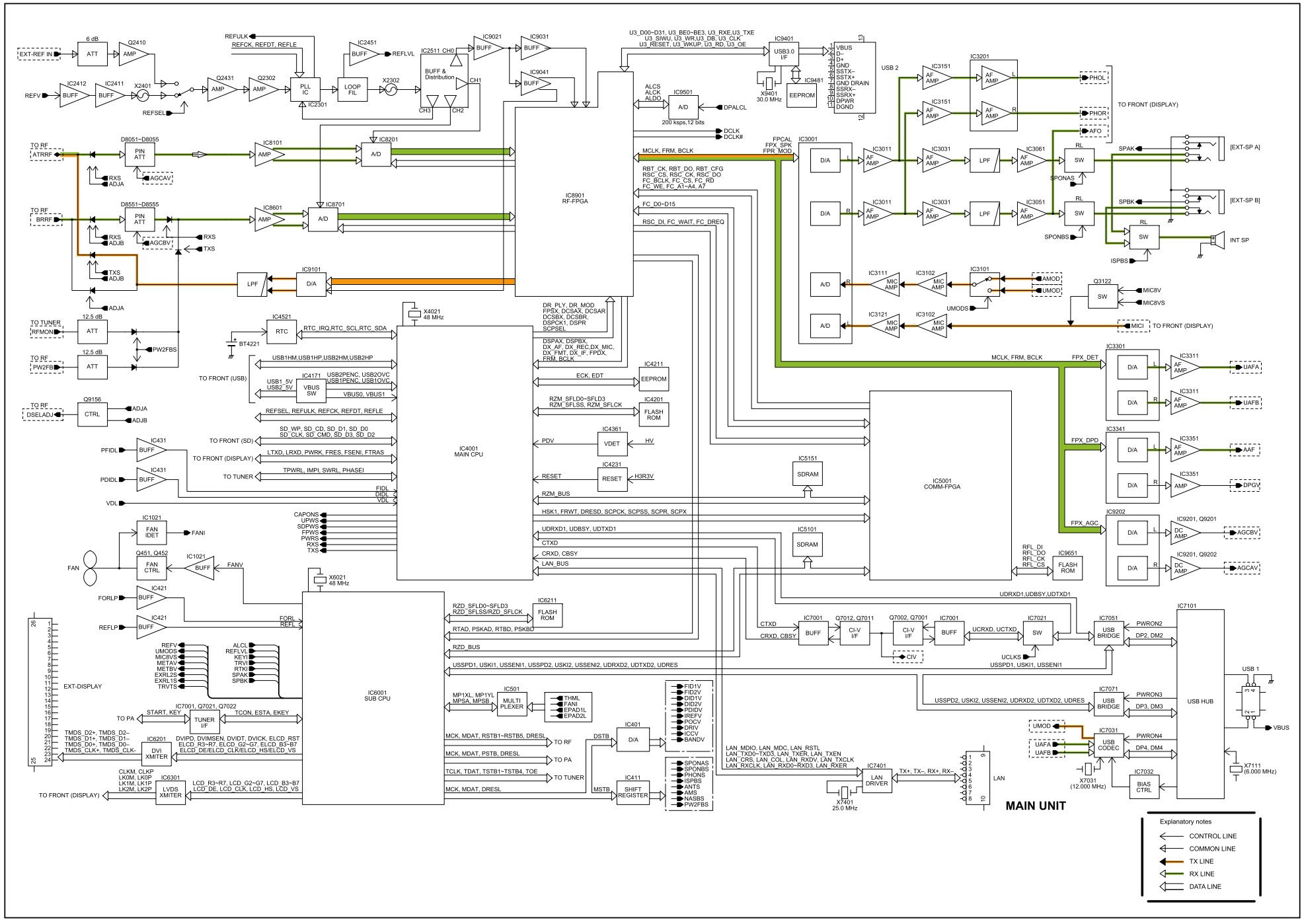
EXT-REF IN
6 dB
ATT
Q2410
AMP
REFV
IC2412
BUFF
IC2411
BUFF
X2401
REFSEL
Q2431
AMP
Q2302
AMP
REFULK
REFCK, REFDT, REFLE
PLL IC
IC2301
LOOP FIL
IC2451
BUFF
REFLVL
X2302
IC2511 CH0
BUFF & Distribution
CH1
CH2
CH3
IC9021
BUFF
IC9031
BUFF
IC9041
BUFF
U3_D00~D31, U3_BE0~BE3, U3_RXE,U3_TXE
U3_SIWU, U3_WR,U3_DB, U3_CLK
U3_RESET, U3_WKUP, U3_RD, U3_OE
IC9401
USB3.0 I/F
X9401
30.0 MHz
IC9481
EEPROM
VBUS
D-
D+
GND
SSTX-
SSTX+
GND_DRAIN
SSRX-
SSRX+
DPWR
DGND
USB 2
ALCS
ALCK
ALDO
IC9501
A/D
DPALCL
200 ksps,12 bits
DCLK
DCLK#
TO RF
ATRRF
D8051~D8055
PIN ATT
RXS
ADJA
AGCAV
IC8101
AMP
IC8201
A/D
MCLK, FRM, BCLK
IC8901
RF-FPGA
RBT_CK, RBT_DO, RBT_CFG
RSC_CS, RSC_CK, RSC_DO
FC_BCLK, FC_CS, FC_RD
FC_WE, FC_A1~A4, A7
FC_D0~D15
RSC_DI, FC_WAIT, FC_DREQ
TO RF
BRRF
D8551~D8555
PIN ATT
RXS
ADJB
AGCBV
RXS
TXS
TXS
ADJB
IC8601
AMP
IC8701
A/D
LPF
IC9101
D/A
ADJA
FPCAL
FPX_SPK
FPR_MOD
IC3001
D/A
D/A
A/D
A/D
IC3011
AF AMP
IC3031
AF AMP
IC3111
MIC AMP
IC3121
MIC AMP
IC3102
MIC AMP
IC3101
AMOD
UMOD
UMODS
IC3201
AF AMP
IC3151
AF AMP
PHOL
PHOR
AFO
TO FRONT (DISPLAY)
LPF
IC3061
AF AMP
IC3051
AF AMP
RL
SW
SPAK
SPONAS
SPBK
SPONBS
[EXT-SP A]
[EXT-SP B]
INT SP
ISPBS
Q3122
SW
MIC8V
MIC8VS
MICI
TO FRONT (DISPLAY)
TO TUNER
RFMON
12.5 dB
ATT
PW2FBS
TO RF
PW2FBS
12.5 dB
ATT
TO RF
DSELADJ
Q9156
CTRL
ADJA
ADJB
X4021
48 MHz
IC4521
RTC
BT4221
RTC_IRQ,RTC_SCL,RTC_SDA
DR_PLY, DR_MOD
FPSX, DCSAX, DCSAR
DCSBX, DCSBR,
DSPCK1, DSPR
SCPSEL
DSPAX, DSPBX,
DX_AF, DX_REC,DX_MIC,
DX_FMT, DX_IF, FPDX,
FRM, BCLK
TO FRONT (USB)
USB1HM,USB1HP,USB2HM,USB2HP
USB1_5V
USB2_5V
IC4171
VBUS SW
USB2PENC, USB2OVC
USB1PENC, USB1OVC
VBUS0, VBUS1
IC4211
EEPROM
ECK, EDT
IC4201
FLASH ROM
RZM_SFLD0~SFLD3
RZM_SFLSS, RZM_SFLCK
REFSEL, REFULK, REFCK, REFDT, REFLE
IC4001
MAIN CPU
TO FRONT (SD)
SD_WP, SD_CD, SD_D1, SD_D0
SD_CLK, SD_CMD, SD_D3, SD_D2
IC4361
VDET
PDV
HV
TO FRONT (DISPLAY)
LTXD, LRXD, PWRK, FRES, FSENI, FTRAS
IC4231
RESET
RESET
H3R3V
TO TUNER
TPWRL, IMPI, SWRL, PHASEI
PFIDL
IC431
BUFF
PDIDL
IC431
BUFF
VDL
FIDL
DIDL
VDL
IC5151
SDRAM
IC5101
SDRAM
IC5001
COMM-FPGA
RZM_BUS
HSK1, FRWT, DRESD, SCPCK, SCPSS, SCPR, SCPX
UDRXD1, UDBSY, UDTXD1
CTXD
CRXD, CBSY
LAN_BUS
CAPONS
UPWS
SDPWS
FPWS
PWRS
RXS
TXS
IC1021
FAN IDET
FANI
FAN
Q451, Q452
FAN CTRL
IC1021
BUFF
FANV
X6021
48 MHz
FORLP
IC421
BUFF
REFLP
IC421
BUFF
FORL
REFL
IC6001
SUB CPU
RZD_SFLD0~SFLD3
RZD_SFLSS/RZD_SFLCK
IC6211
FLASH ROM
RTAD, PSKAD, RTBD, PSKBD
RZD_BUS
USSPD1, USKI1, USSENI1, USSPD2, USKI2, USSENI2, UDRXD2, UDTXD2, UDRES
IC9651
FLASH ROM
RFL_DI
RFL_DO
RFL_CK
RFL_CS
IC9202
D/A
D/A
IC9201, Q9201
DC AMP
IC9201, Q9202
DC AMP
AGCBV
AGCAV
IC3301
D/A
D/A
IC3311
AF AMP
UAFA
UAFB
IC3341
D/A
D/A
IC3351
AF AMP
AMP
AAF
DPGV
FPX_DET
FPX_DPD
FPX_AGC
UDRXD1,UDBSY,UDTXD1
IC7001
BUFF
Q7012, Q7011
CI-V I/F
Q7002, Q7001
CI-V I/F
CIV
IC7001
BUFF
UCRXD, UCTXD
IC7021
SW
UCLKS
USSPD1, USKI1, USSENI1
IC7051
USB BRIDGE
PWRON2
DP2, DM2
IC7101
USB HUB
USB 1
VBUS
X7111
(6.000 MHz)
IC7071
USB BRIDGE
PWRON3
DP3, DM3
USSPD2, USKI2, USSENI2, UDRXD2, UDTXD2, UDRES
UMOD
UAFA
UAFB
IC7031
USB CODEC
PWRON4
DP4, DM4
X7031
(12.000 MHz)
IC7032
BIAS CTRL
EXT-DISPLAY
REFV
UMODS
MIC8VS
METAV
METBV
EXRL2S
EXRL1S
TRVTS
ALCL
REFLVL
KEYI
TRVI
RTKI
SPAK
SPBK
IC7001, Q7021, Q7022
START, KEY
TUNER I/F
TCON, ESTA, EKEY
TO PA
TMDS_D2+, TMDS_D2–
TMDS_D1+, TMDS_D1–
TMDS_D0+, TMDS_D0–
TMDS_CLK+, TMDS_CLK-
IC6201
DVI XMITER
DVIPD, DVIMSEN, DVIDT, DVICK, ELCD_RST
ELCD_R3~R7, ELCD_G2~G7, ELCD_B3~B7
ELCD_DE/ELCD_CLK/ELCD_HS/ELCD_VS
CLKM, CLKP
LK0M, LK0P
LK1M, LK1P
LK2M, LK2P
IC6301
LVDS XMITER
LCD_R3~R7, LCD_G2~G7, LCD_B3~B7
LCD_DE, LCD_CLK, LCD_HS, LCD_VS
TO FRONT (DISPLAY)
MP1XL, MP1YL
MPSA, MPSB
IC501
MULTI PLEXER
THML
FANI
EPAD1L
EPAD2L
MCK, MDAT, RSTB1~RSTB5, DRESL
TO RF
MCK, MDAT, PSTB, DRESL
TO PA
TCLK, TDAT, TSTB1~TSTB4, TOE
TO TUNER
MCK, MDAT, DRESL
DSTB
IC401
D/A
MSTB
IC411
SHIFT REGISTER
FID1V
FID2V
DID1V
DID2V
PDIDV
IREFV
POCV
DRIV
ICCV
BANDV
SPONAS
SPONBS
PHONS
ISPBS
ANTS
AMS
NASBS
PW2FBS
LAN_MDIO, LAN_MDC, LAN_RSTL
LAN_TXD0~TXD3, LAN_TXER, LAN_TXEN
LAN_CRS, LAN_COL, LAN_RXDV, LAN_TXCLK
LAN_RXCLK, LAN_RXD0~RXD3, LAN_RXER
IC7401
LAN DRIVER
X7401
25.0 MHz
TX+, TX–, RX+, RX–
LAN
MAIN UNIT
Explanatory notes
CONTROL LINE
COMMON LINE
TX LINE
RX LINE
DATA LINE